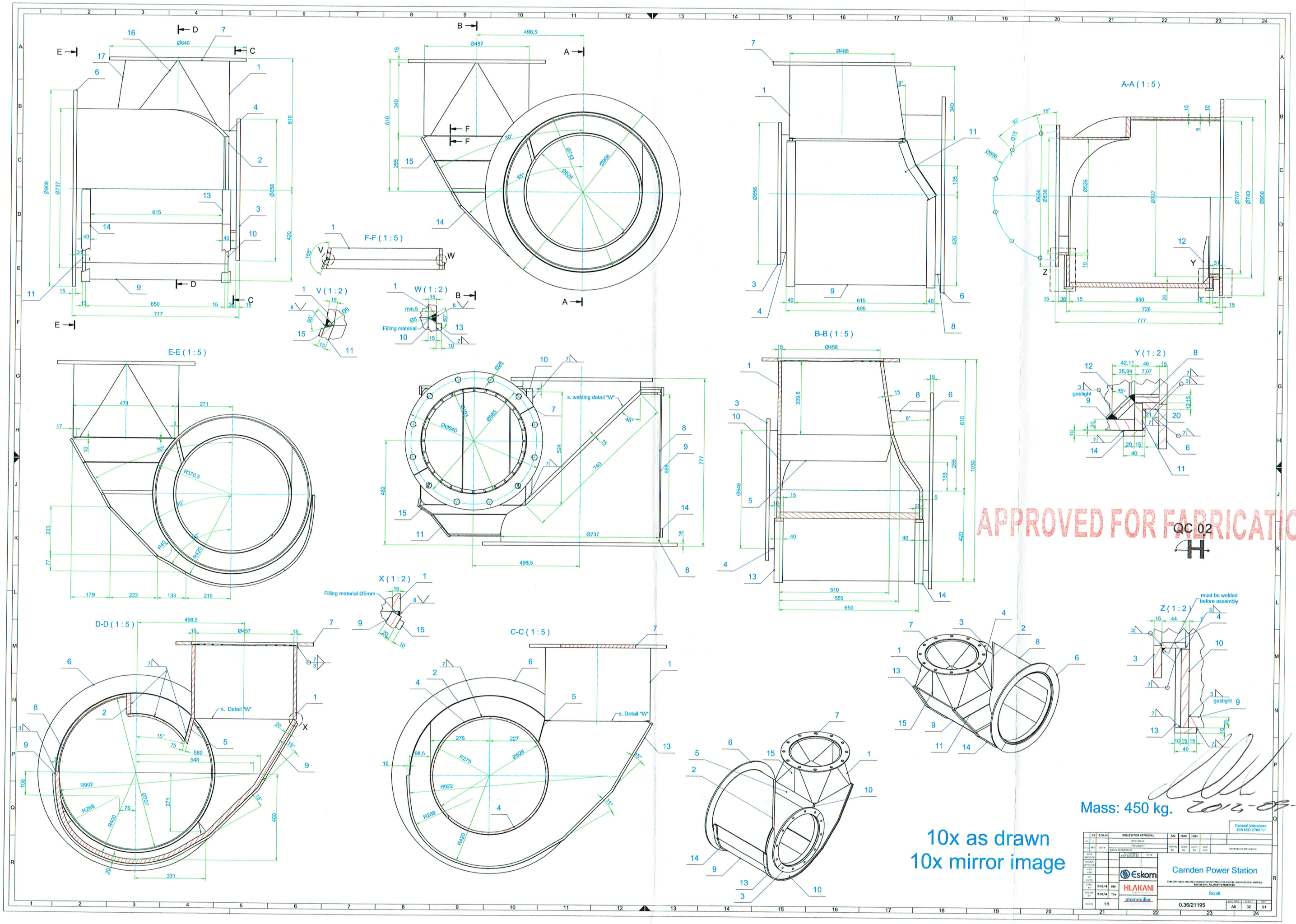

A-A (1 : 5)
B-B (1 : 5)
C-C (1 : 5)
D-D (1 : 5)
E-E (1 : 5)
F-F (1 : 5)
V (1 : 2)
W (1 : 2)
X (1 : 2)
Y (1 : 2)
Z (1 : 2)
s. Detail "W"
s. welding detail "W"
Filling material
Filling material Ø5mm
must be welded before assembly
gastight
APPROVED FOR FABRICATION
QC 02
Mass: 450 kg.
2012-05-26
10x as drawn
10x mirror image
General tolerances DIN ISO 2768 "c"
Eskom
HLAKANI
steinmüller
Camden Power Station
Scroll
0.36/21195
A0
32
01